Development of CRF1000L Africa Twin

Naoshi IIZUKA* Yutaka YAMAKURA** Yoshiyuki IMAI*
Akihiro IIDA** Takeshi SUGANO* Masanori NAKAMURA*
Shinya KOYAMA* Kenichiro NAKAMURA* Kazuhiko ONO*

ABSTRACT

The CRF1000L Africa Twin was developed with technologies for a new era while inheriting the tradition of the XRV750 Africa Twin, which pioneered the adventure sports category. Extensive weight reduction and mass centralization allows the size and weight of the CRF1000L Africa Twin to closely match its predecessor. An engine with parallel twin cylinders and displacement of 998 cm^3 was employed. In addition, a dry sump system was applied in which the oil tank is integrated within the crankcase. These features contributed to enabling a powerful and compact power unit. The dynamic performances in off-road riding and the performances sought as an on-road touring motorcycle are fulfilled at the highest levels. Furthermore, a dual clutch transmission was applied for the first time to an off-road motorcycle, and has proven its effectiveness in off-road riding as well.

1. Introduction

While the overall motorcycle markets of advanced countries like those in Europe have recently shown declining trends, the large on-off road models are selling steadily. Until 1985, the market size of large on-off road motorcycle models was small with only a few models seen in that category. Nevertheless, in 1986, Honda launched the XL600V TRANSALP, which is equipped with a full fairing first time in the category. In 1988, the XRV650 Africa Twin was released with transferred technologies from the NXR750, which was the machine that leads winning championships in Paris-Dakar rallies 3 consecutive years from 1986. Following to that, in 1990, the XRV750 Africa Twin with an enlarged engine displacement was put on the market laying the foundation of a new concept of adventure sports models. In the year 2000, the XL1000V Varadero was developed and introduced in the market to cater for the needs of high-speed, long-distance motorcycle travel. In the meantime, taking into account customers' shift of interest more toward touring, the European motorcycle manufacturers reinforced their model lineup by adding off-road-image models while increasing engine displacement to cope with high speed travels, expanding the sales volume and the market share year after year.

Based on this, Honda decided to develop and introduce a large on-off road model, CRF1000L Africa Twin (Fig. 1), to the global market incorporating modern techniques to meet environmental requirements and to distinguish it as a next-generation model while maintaining the basic concept of XRV750 Africa Twin.

In this paper, the following information will introduce the technologies applied to the CRF1000L Africa Twin including complete vehicle packaging, the newly developed 998 cm^3 parallel twin-cylinder engine, and the Dual Clutch Transmission (DCT) control system capable of handling

Fig. 1 The CRF1000L Africa Twin

* Motorcycle R&D Center
** Honda R&D Southeast Asia Co., Ltd.

off-road riding conditions.

Hereafter, in this paper, the CRF1000L Africa Twin is called "this model" and the XRV750 Africa Twin is called "preceding model."

2. Objectives

The development team aimed to develop the new era Africa Twin while maintaining the heritage of challenges in the Paris-Dakar rally that Honda participated in since the 1980s as well as in the creation of a then-new market segment. If referred to as Africa Twin, having a high off-road capability was a must. It was also considered necessary to ensure comfort on pavement on the way to the off-road area, including high-speed travels carrying luggage. Accordingly, the objective was set to achieve a balance of the two contradicting requirements at a high level.

The key word of concept was set as "Go Anywhere - Full-scale adventure model useful for daily commuting as well as for riding across the vast tracts of land you've long dreamed about."

3. Frame and Chassis

3.1. Packaging and Dimension

The newly developed compact parallel twin-cylinder engine was employed in this model. This configuration allows for mass centralization by laying the heavy battery and other electrical parts such as Engine Control Unit (ECU) near motorcycle's Center of Gravity (CG), where the space would be occupied by the rear cylinder a V engine configuration (Fig. 2). While maintaining the same overall size as the preceding model, the front suspension stroke was increased from 220 mm to 230 mm, and the rear from 214 mm to 220 mm. Using the same 21-inch front wheel as the preceding model, but changing the rear wheel from 17-inch to 18-inch, the ground clearance was increased from 220 mm to 250 mm (Fig. 3).

The steering system employed upside-down type front forks. This type of front fork usually has a large diameter and the handlebar steering angle becomes smaller. However, by reducing sizes and changing shapes of the body frame adjacent to the head pipe and the air cleaner box, the steering angle was rather increased to 43 deg compared to from 40 deg, which was the angle of the preceding model with conventional type forks. This steering angle made the motorcycle minimum turning radius as small as 2.6 m, which is one of the smallest radiuses in large on-off road motorcycle category. As a result, a motorcycle was created that was easy to handle, not only in an off-road situation requiring a switch back in a limited space such as the woods but also when pushing the motorcycle around the garage.

3.2. Engine Location

The parallel-twin engine exclusively developed for this model was designed to reduce the longitudinal size compared to the V twin engine mounted on the preceding model. This design enabled a shorter the distance between the pivots of the front tire and the swing-arm by 8 mm (Fig. 4), increasing the shared load ratio on the front tire.

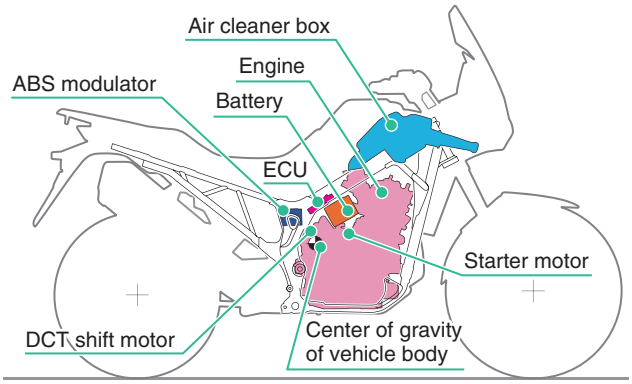

Fig. 2 Layout of key components

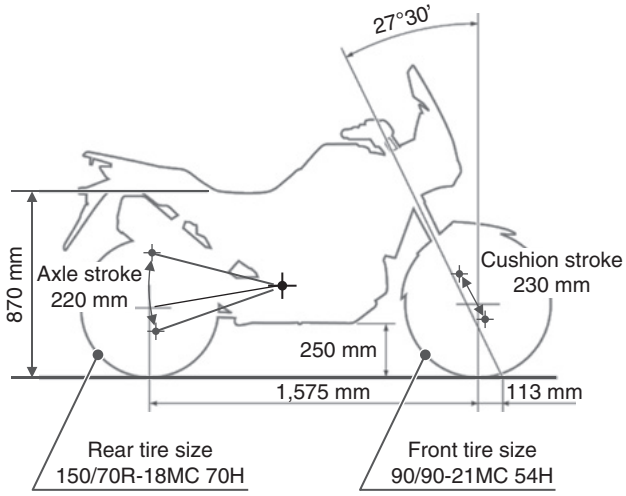

Fig. 3 Dimension and key parameters

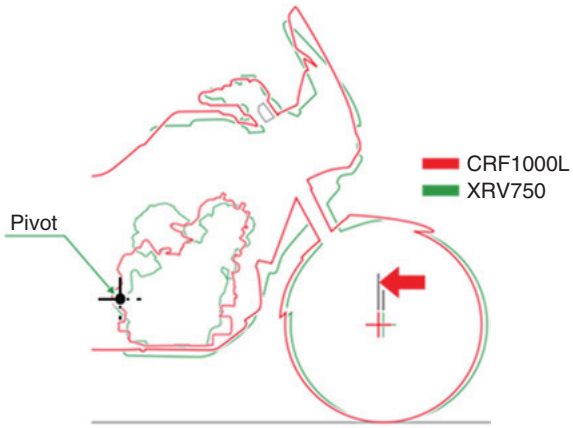

Fig. 4 Comparison of front axle positions

Consequently, the vehicle stability was enhanced and accurate feedback of wheel movements to the rider was achieved. As a result, the road holding property of front tire, which is a typical vehicle characteristic required for off-road type motorcycles, was enhanced.

A V-twin engine has front and rear cylinders but a parallel twin-cylinder engine doesn't have to have a cylinder located in the rear space. Accordingly, the width of the motorcycle was able to be reduced at the area between rider's knees. With this vehicle body shape, the rider can freely take various active riding positions in off-road riding (Fig. 5).

A seat height adjuster that reduces the height by 20 mm from the normal seat height of 870 mm was equipped (Fig. 6). This enhances convenience when riding tandem or situations requiring the rider's foot to frequently reach the ground, such as off-road riding.

3.3. Frame Body

The semi-double-cradle frame configuration was employed (Fig. 7). This configuration has been applied to Honda off-road models for a long time, and also was applied to the CRF450 Rally that took part in Dakar Rally. It was applied to the preceding model as well. Appropriate strength and stiffness were applied to cope with various riding situations, such as a tough riding on off-road, tandem highway cruising in a fully loaded condition or rough road running while heavily loaded. At the same time, the frame is flexible enough to allow the tires to properly trace road surfaces to convey the drive force from the engine to the ground even on rough roads. To achieve the two contradicting requirements, the modified oval cross section as shown by Fig. 8 was employed in the main frame pipe.

In addition the engine is also attached to the frame by the engine hangers at six mounting points surrounding (Fig. 9). As a result of these, the frame body achieved the best stiffness balance. Moreover, the high tensile strength steel was employed for the frame pipes to obtain adequate strength to cope with a wide variety of conditions from high-speed operations to off-road riding, while also reducing weight to enhance the maneuverability of the motorcycle.

3.4. Luggage

A top box and pannier cases were provided for this model as convenient accessories to carry cargo (Fig. 10). To accommodate pannier cases, separate mount brackets

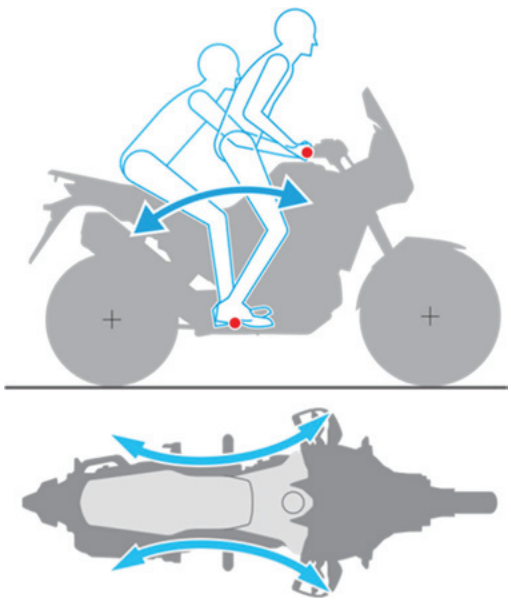

Fig. 5 Rider movements

Standard position 870 mm Low position 850 mm

Fig. 6 Seat height adjuster

Fig. 7 Frame body (MT model)

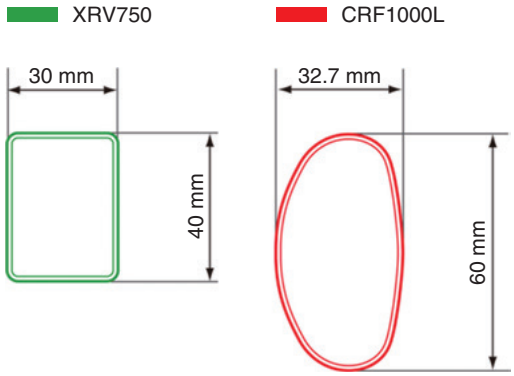

Fig. 8 Comparisons of frame pipe cross section

are generally provided in the motorcycle. Notwithstanding that, the pannier catch system for this model is the same as that used for the VFR1200X, requiring no mount brackets at all. The one-piece construction of the rear carrier, the rear grips, and the pannier catch system permitted a reduction of the number of parts used while contributing to strengthen and stiffness. The use of nylon reinforced by glass also permitted weight reduction (Fig. 11).

3.5. Chassis

3.5.1. Front suspension

A upside-down fork with slide pipe diameter 45 mm was employed in the front suspension reducing unsprung mass, enhancing sliding actions and increasing stiffness. The front axle holder is of a leading axle type to bring the CG of steerable parts close to the steering stem to reduce inertia moment around the steering axis as well as facilitating the opposed 4-pot, radial mount brake calipers.

The suspension had to be widely adjustable because a variety of usage is expected such as daily town use, touring with a passenger and luggage, and off-road riding. Accordingly, a fully adjustable suspension system was employed. The system has damping force adjusters both for rebound and compression in addition to a spring preload adjuster [Fig. 12(a)].

3.5.2. Rear shock

In off-road riding, the rider takes positive body actions such as fore-and-aft weight shift, sitting and standing. Accordingly, the motorcycle has to be slim and easy for the rider to reach the ground with his foot. At the same time, to ensure adequate fuel range for touring use, the fuel tank capacity was set at 18 L. To achieve slimness and adequate fuel tank capacity, the upper mount point of the rear shock in this model was lowered by 33 mm from the preceding model. By laying the rear end of fuel tank in the space created by the relocation of the rear shock, the necessary fuel tank capacity was maintained without compromising freedom of riding position. The top-in-the-class ground clearance and rear axle stroke were achieved by modifying

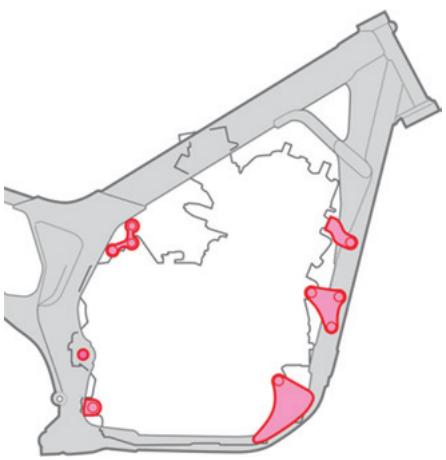

Fig. 9 Six engine hanger locations

Fig. 10 Accessories integrated in motorcycle styling

Fig. 11 Pannier system

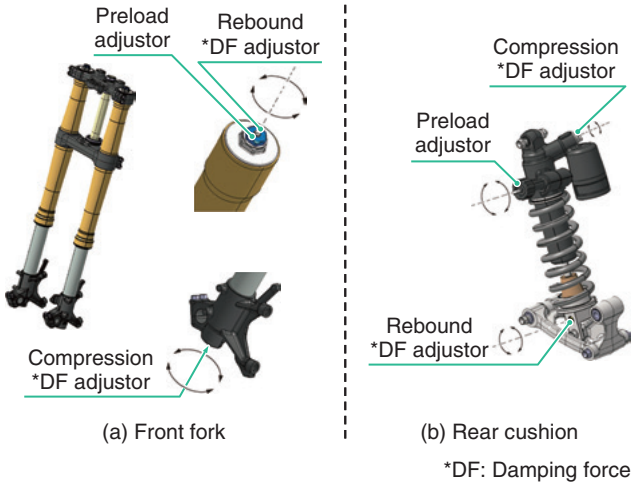

Fig. 12 Front fork and rear cushion

the overall length of rear shock and exclusively designing the Pro-link linkage. Just like in the front fork, the rear shock is fully adjustable having the rebound and compression damper adjusters in addition to the spring preload adjuster to cope with various riding conditions. The frequently-used spring preload adjuster is of a hydraulic type that requires no tool for quick adjustment to cope with changes of load [Fig. 12(b)].

3.5.3. Swing-arm

So as not to disturb an active riding position, the right side of the swing arm in the proximity of muffler had to be shifted towards the inside as far as possible. At the same time, it was also necessary to satisfy the requirements for stiffness and strength appropriately. Therefore, a hollow aluminum gravity die casting method, which is suitable for efficient optimization of the shape and the cast wall thickness, was applied to the swing-arm (Fig. 13).

3.5.4. Brake

To achieve basic braking efficiency adequate when carrying luggage and a passenger, the maximum braking efficiency was increased from the preceding model. At the same time, how the brake works was fine-tuned to allow delicate brake control for off-road. Fig. 14 shows front and rear brake systems. The diameter 310 mm, floating brake disc was exclusively designed for this model, and two of them are applied to the front brake. The use of aluminum for the disc hub contributes to a weight reduction. The opposed 4-pot radial-mount brake calipers are exclusively designed to achieve stable initial brake feel, high brake controllability and a weight reduction. A 256 mm disc is employed in the rear brake.

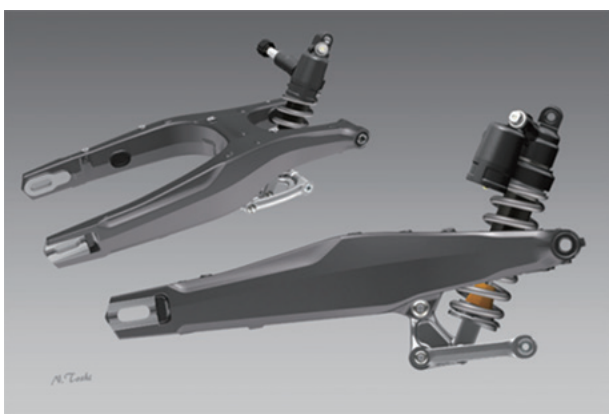

Fig. 13 Swing-arm

(a) Front brake (b) Rear brake

Fig. 14 Front and rear brake

3.5.5. Rear ABS function inhibitor and DCT control related to rear brake

Presuming there are off road situations where the front and rear brakes have to be applied individually, a Honda-first rear ABS function inhibitor was employed. This system permits the rider to turn off the rear ABS function by toggling a switch. When the rear ABS function is turned off, the rider can control the rear brake by pedal effort alone. In such a situation, the rear ABS function is deactivated and is shown on the indicator to inform the rider.

The DCT model has an engine stall prevention function. When the rider applies a hard rear braking and the rear wheel is about to lock, the system predicts an imminent rear wheel lock based on changes in engine speed and vehicle speed, and quickly reduces hydraulic pressure to disengage the clutch. This allows the rider to lock the rear wheel without paying special attention to the clutch lever operations, which is inevitable when riding a manual transmission motorcycle.

4. Over View of Engine and Applied Technologies

4.1. Power Output Characteristics and Engine Performance

Figure 15 shows an external view of the engine, and Table 1 shows the main specifications of the new engine and preceding model's engine.

The power output characteristics of this model and the preceding model are compared in Fig. 16. Seeking easy-to-use power output and flat torque characteristics just like those of the preceding model, the shape of the intake and

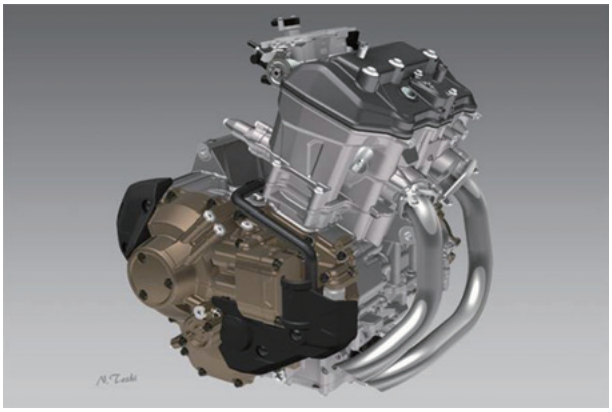

Fig. 15 External view of engine (DCT type)

Table 1 Comparison of specifications of engine

Model name	CRF1000L Africa Twin	XRV750 Africa Twin
Displacement (cm³)	998	742
Bore × stroke (mm)	92.0 × 75.1	81.0 × 72.0
Compression ratio	10.0	9.1
Maximum power (kW/rpm)	70/7,500	45/7,500
Maximum torque (Nm/rpm)	98/6,000	64/6,500

exhaust ports, the valve timing, the intake and exhaust systems, and the two-plug phased ignition timing control were finely tuned. As a result of those measurers, the engine's power delivery was easy to control. These features were coupled with increased power output throughout the entire rev range, achieved by increased engine displacement, thus allowing the engine to exert its performances.

4.2. Applied Technologies of Engine for Light Weight and Compactness

4.2.1. Dry-sump lubrication system with oil tank integrated in crankcase

When used off-road, a motorcycle makes large back-and-forth and up-and-down motions, causing extensive changes to the engine oil level. Accordingly in a model having a wet sump lubrication system, the depth of oil pan is increased to pump out engine oil from a lower part to allow steady feeding of oil by the oil pump without being affected by a change of oil level. A deep oil pan, however, means a reduced ground clearance of the motorcycle, limiting off-road capabilities.

Meanwhile in a dry sump system, a separately incorporated oil reservoir permits steady feed of oil by the oil pump. A separate oil tank, however, is a disadvantage from the standpoint of weight reduction and compactness.

Accordingly in this engine, the dry sump system with the oil tank integrated in the crankcase was employed (Fig. 17). The first feature of this construction is that the oil tank is composed as an integral part of the crankcase and oil pan, and contained in the engine.

The second feature is that the oil pump to feed oil to the oil tank is located inside of the tank.

The first-mentioned feature of this model permits efficient layout of the oil tank having a reduced oil pan height as short as 35.7 mm. Thus the top-of-class ground clearance of 250 mm was established. Furthermore, the second feature permits integration of the oil pan and oil tank, allowing the shortest-possible connection of such parts, thus contributing to weight reduction and compactness.

4.2.2. Layout of water pump in clutch housing

A widely-applied conventional layout of a water pump is such that the water pump seating surface is created on

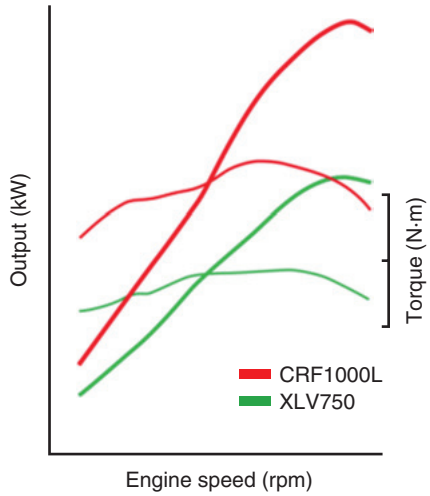

Fig. 16 Engine performance

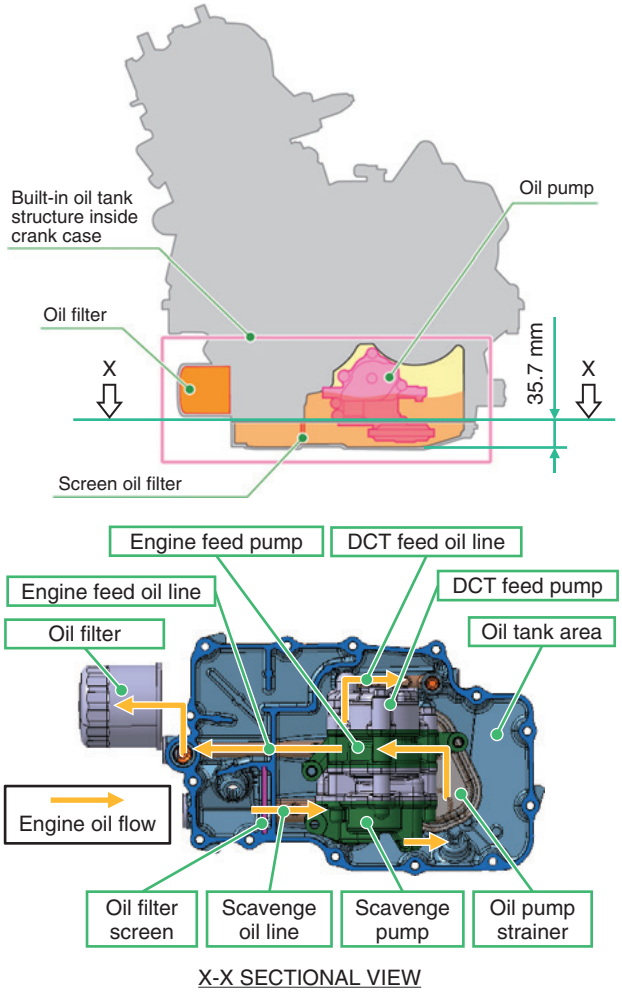

Fig. 17 Construction of dry sump system having oil tank integrated in crankcase

the outside surface of the crankcase or engine cover, and the water pump is bolted on the surface from outside. In such a construction, the presence of a seating surface or bolts on the outer surface of the engine was a cause of limited freedom in the styling design of an engine cover. When incorporating a water pump in the clutch cover, it is necessary to lay the water pump avoiding interference with the hydraulic control devices of the DCT. Accordingly in this engine, the water pump was located inside of the clutch housing (Fig. 18). The feature of this construction is that the water pump seating surface is created in the clutch housing, and the water pump is bolted from inside of the engine. With the said construction employed, the water pump seating surface and the bolts for retention of the water pump are eliminated from outer surface of the engine. This design also eliminates the need to have an external water hose to feed coolant from the water pump to the cylinder water jacket. Moreover, the hydraulic control devices of DCT can be laid in such a manner that overlaps with the water pump when viewed from right side of the engine, contributing to the weight reduction and compactness of the DCT model.

4.2.3. 270 deg phased crank system and biaxial primary balancer

The preceding model was highly praised by customers for its unique V-twin characteristics such as the easy control of power, the traction and the pulse feeling at low speeds. The parallel twin-cylinder, 270 deg phased crank system is employed in this engine to achieve further weight reduction, compactness and mass centralization while maintaining the above-mentioned favorable characteristics.

A parallel twin-cylinder engine with 270 deg phased crank system is known to have uneven combustion intervals that produce a "pulse feeling" similar to a V-twin engine[1]. On the other hand, in a 270 deg phased crank system, while it is possible to cancel the secondary vibration by the reciprocating motions of two pistons, the primary vibrations cannot be quelled. A conventional way to cancel the primary vibration was to add two balancing weights on each of two balancer shafts. In such a system, however, the engine becomes lengthy in the longitudinal direction to avoid interference of the balancer weight and the connecting rod. To deal with this issue, a unique two-shaft, three weight balancer design[2] that permits cancellation of primary vibrations was employed in this engine (Fig. 19).

With this new balancer design, low vibration engine characteristics were achieved while maintaining light weight and compactness.

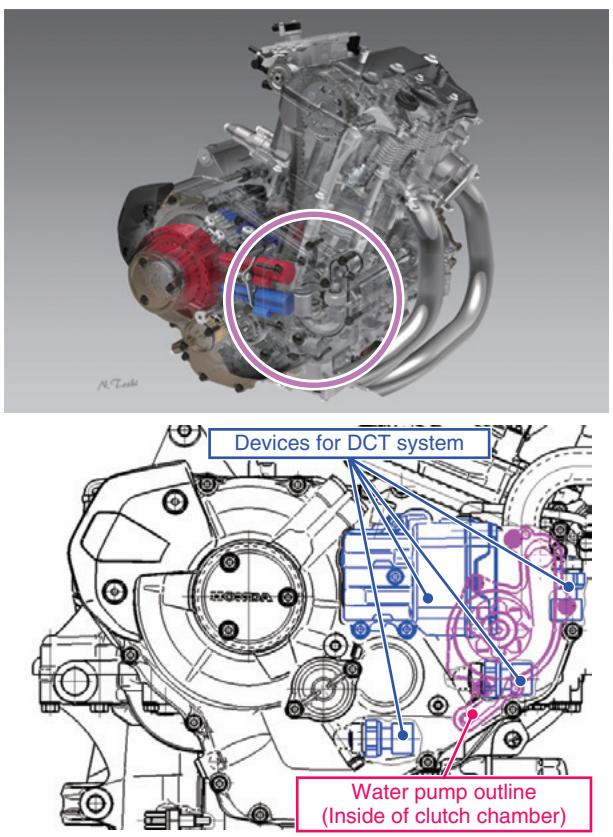

Fig. 18 Construction of water pump stored in clutch housing

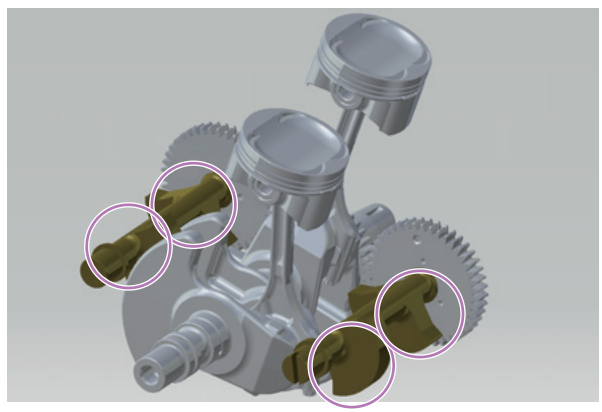

(a) Biaxial primary balancer (Conventional type)

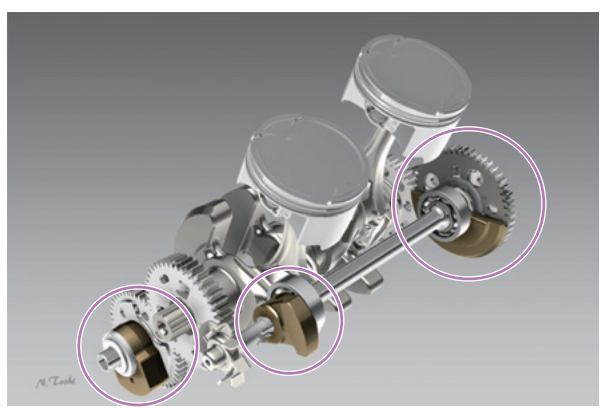

(b) Biaxial primary balancer (CRF1000L Africa Twin)

Fig. 19 Parallel twin cylinder using 270 deg phased crank shaft and biaxial primary balancer

5. Over View and Control Technologies of DCT for On-off Road Models

5.1. DCT System

The cross-sectional view of DCT system is shown in Fig. 20. In this model, it is assumed that when riding off-road the rider will move his/her upper body in back-and-forth direction with his feet on the pegs or stick out a leg to maintain balance in a corner. Therefore, parts located around the rider's legs should be designed not to disturb those motions. Consequently the right-side crankcase cover and the gear shift mechanism on the left-side were required to be compact. With the hydraulic system redesigned in the DCT of this model, the right-side cover protrusion was reduced by more than 10 mm compared to the NC700/750 series.

The DCT gear shift system is based on that of a manual transmission (MT). Rider's shifting effort from the shift pedal to the shift spindle is substituted by the force from the control motor via the reduction gears.

In this model, the DCT shift motor is laid at the position enclosed by the starter motor, battery box and shift spindle to achieve mass centralization and a ground clearance of 250 mm (Fig. 21).

5.2. DCT Control System

The DCT enables direct transmission of engine torque, just like the drive train of a manual transmission. The automatic gear shifting system, which requires no clutch work or shift pedal operation by the rider, allows smooth shifting of gear without interruption of traction. Such features are big advantages for an on-off road model when riding off-road because the rider can concentrate on throttle and brake operations while maintaining such traction that the rider feels the powertrain is directly connected to the rear wheel. To take the maximum advantage of this system, the new control technologies described as follows was developed.

5.2.1. Function of G-switch

The G-switch (G means "Gravel") to alter shift mode is added to enhance off-road riding performance of the DCT model. When the G-switch is toggled, a G indicator appears in the LCD on a gauge panel to inform the rider that the G-switch is turned on. Operations when the G-switch is turned on are as follows.

The hydraulic pressure on the engaging clutch is increased more quickly than usual when the throttle is opened from a fully closed condition. This allows a faster transition from partial clutch engagement to full engagement, allowing a quick rise of traction to enhance response (Fig. 22). As a result, traction characteristics that better match rider's demands off-road, such as control of motorcycle the pitching direction and/or intentional tail slides with throttle, are provided.

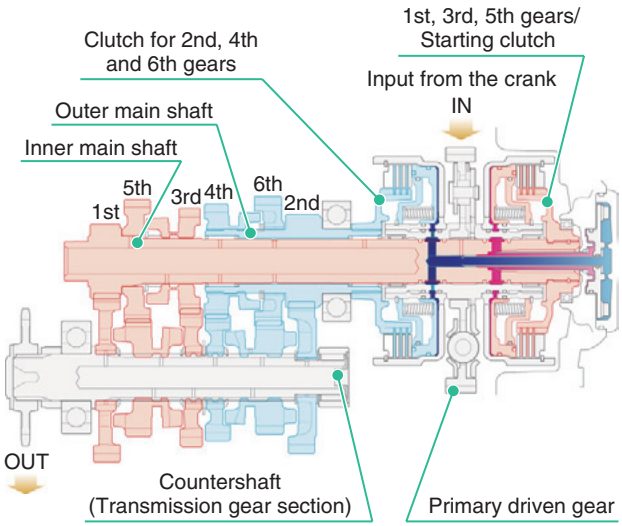

Fig. 20 DCT system

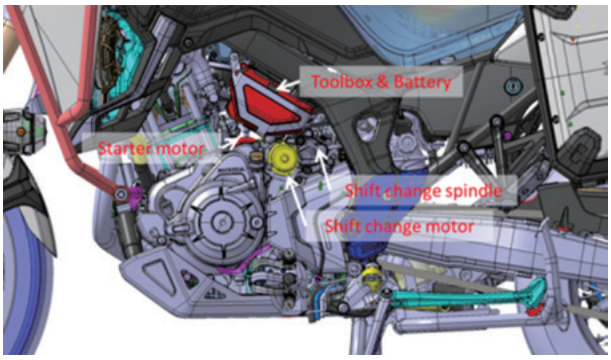

Fig. 21 Location of DCT shift motor

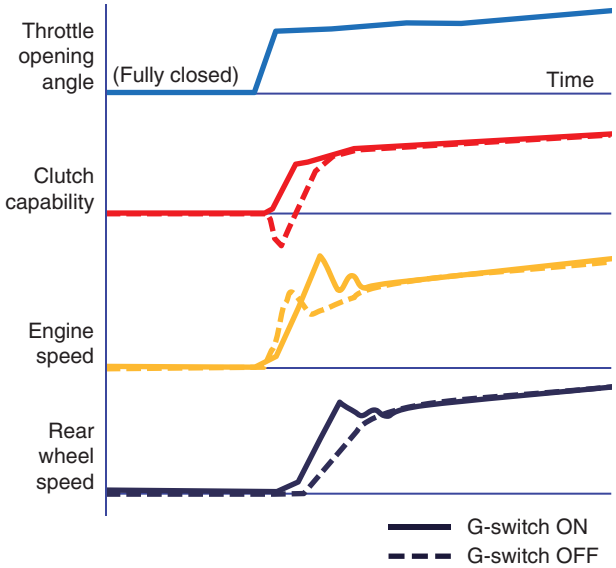

Fig. 22 Clutch capability control with G-switch

To better match off-road use, the shift schedule in Automatic Transmission (AT) mode is modified in such a manner that the vehicle speed for upshift is increased and the vehicle speed for down shift is lowered mainly in low speeds (Fig. 23).

Furthermore, presuming riders' selection of various DCT modes during riding, the G-switch function is maintained even in the MT mode to alter clutch engagement/disengagement characteristics in the same manner as in the AT mode.

5.2.2. Three-level S mode

AT modes of the DCT are roughly classified into two modes. One is D mode for fuel efficiency mainly for city use. Another is S mode for overtaking at a high speed or sporty riding. This model allows further selection of S mode in three different levels so that the rider can choose a shift schedule to his/her preference. In addition to the level 2, which corresponds to the conventional S mode, the rider can now choose the level 1, which is moderately sporty yet fuel efficient, or the level 3, which is the sportiest of all automatic modes (Fig. 24). The selected level of S mode is memorized in the ECU even after the ignition switch is turned off.

5.2.3. Gradient estimation

The gradient of a road surface is estimated by the inputs from various sensors in the motorcycle (engine speed, throttle opening, vehicle speed, gear position, brake switch, etc.). In the AT mode, the shift schedule is altered in accordance with the gradient. When estimated as a downhill and the brake is used frequently for deceleration, the gear is shifted down earlier than usual to secure appropriate engine brake control. When estimated as an uphill, the shift schedule is promptly altered to allow selection of a lower gear than usual to secure sufficient traction to go up the hill (Fig. 25).

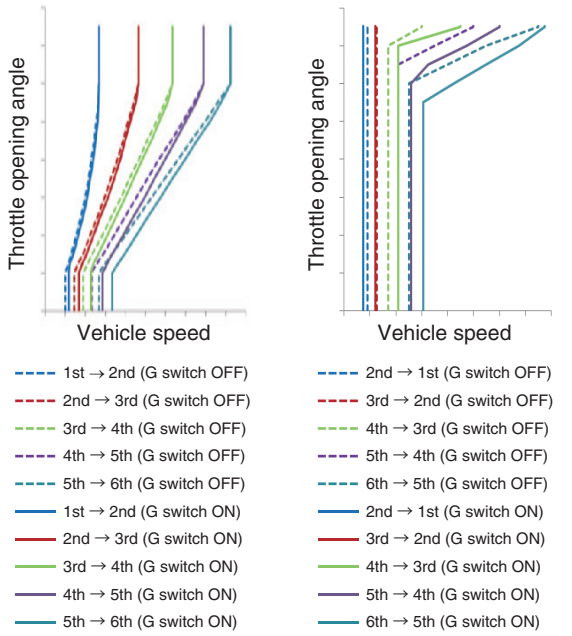

(a) Basic shift up schedule (b) Basic shift down schedule

Fig. 23 Shift schedule in AT mode with G-switch on or off

5.2.4. Honda selectable torque control

Honda selectable torque control (hereafter referred to as "torque control"), which was applied to the VFR1200X

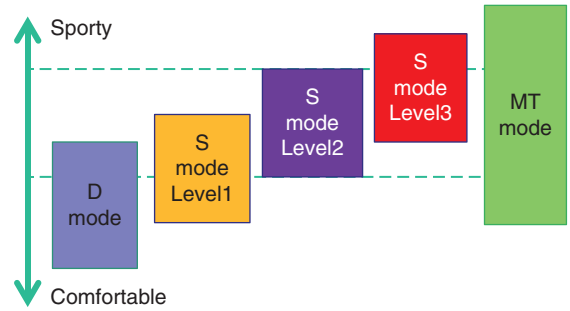

(a) Concept of AT mode setting

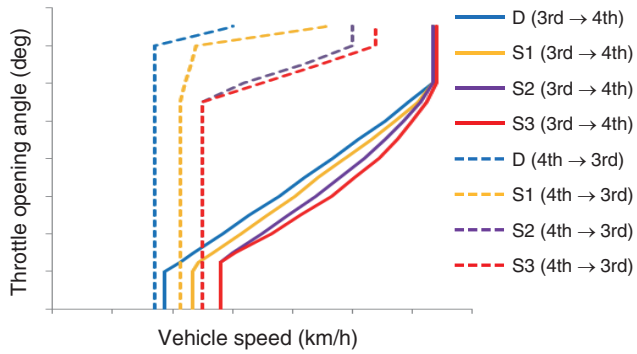

(b) Example of shift schedule difference

Fig. 24 AT modes with three levels in S mode

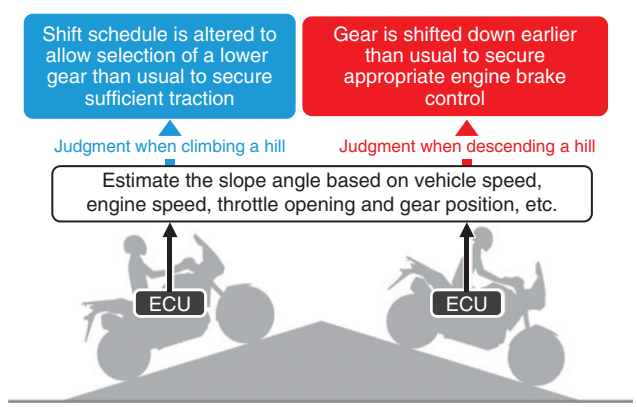

Fig. 25 Image diagram of gear-shifting control at uphill and downhill

and the VFR800X, was employed in this model (Fig. 26). The rider can select a degree of engine torque control intervention from three different levels to their preference by the torque control switch. The torque is controlled by cutting out fuel injection to each cylinder when necessary. When the order of fuel cut is inappropriate in an engine having a small number of cylinders and uneven combustion intervals, the engine torque fluctuates more. Under such conditions, not only a steady torque reduction effect become unattainable, but also the pulse feeling is reduced. Accordingly, the fuel is injected and cut as alternately as possible when the torque control is working to reduce torque while maintaining adequate pulse feeling.

This function is available when the vehicle is starting from the complete stop. This helps prevent rear wheel spin when the throttle is opened abruptly. This feature is highly important for a motorcycle with DCT that has no intervention of rider's clutch operation (Fig. 27).

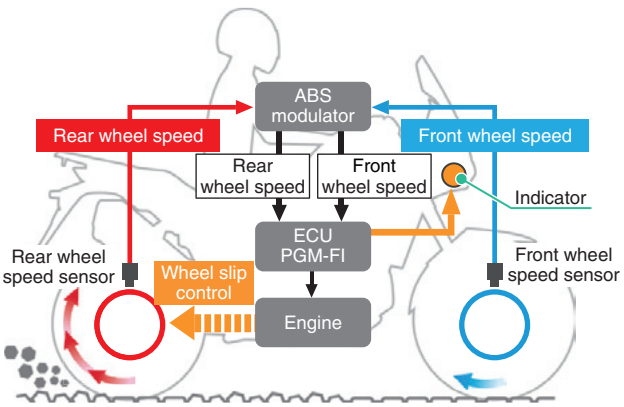

Fig. 26 Honda selectable torque control

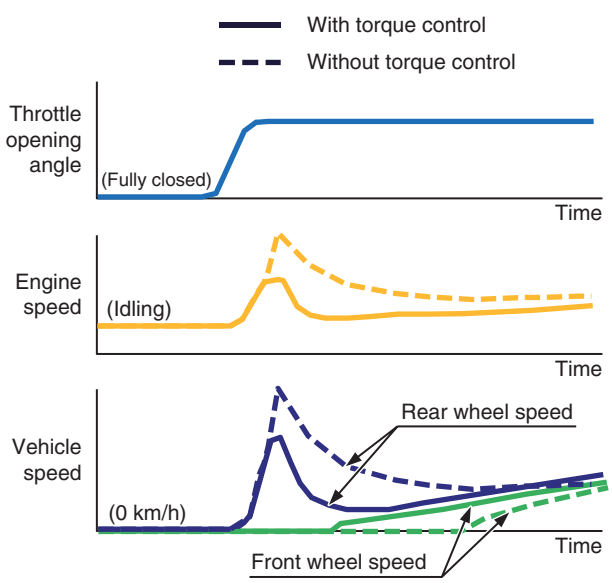

Fig. 27 Honda selectable torque control operation at start

6. Intake and Exhaust Systems

6.1. Intake System

Figure 28 shows the configuration of air intake system. To achieve the maximum trapping efficiency while giving prioritizing complete motorcycle packaging, the air cleaner is composed of right and left ducts and two air filters. The air cleaner box is a three-chamber construction positioned across the main frame behind the steering head pipe. The length of connecting tube from the air cleaner box to the throttle body was set differently for each cylinder (#1: 110 mm/#2: 160 mm) to cope with the uneven intake intervals of the 270 deg phase crank.

To cope with dusty air in off-road use and to ensure a long service life of the air filter, the intake ducts were located in the headlight side cowl, and two viscous air filters having a filtering area of 1,200 cm^2 were provided in the right and left sides of air cleaner box.

To keep intake noise at a low level while avoiding a weight increase from use of devices such as a flap in the intake duct, an intake duct having a diameter of 25.2 mm, which is as small as those of small displacement engines, was applied. A tapered duct, in which the diameter increases from 25.2 mm to 50.6 mm toward the downstream of air flow, was also applied to reduce suction resistance and achieve the target power output while ensuring drivability. Further, the overall length of duct was set at 286 mm to increase power output by the inertia effect from resonation in the intake system.

6.2. Exhaust System

To represent the concept of this particular model, the aim was to realize an exhaust sound with boldness brought by a 1,000 cc class engine and a distinctly accented beat that is typical character of a twin-cylinder engine offering a light impression. For the sound quality evaluation, criteria such as "deepness" and "pulse feeling" were used. These indexes

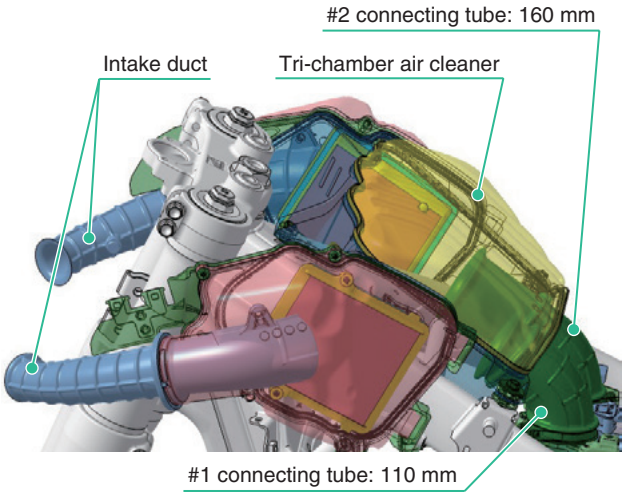

Fig. 28 Configuration of air intake system

are an average of the subjective evaluation scores given by a number of evaluators. Deepness is closely correlated to the sound pressure in the low frequency zone, while the pulse feeling is strongly correlated to the combustion intervals of engine and the sound pressure in the high frequency zone[3].

The construction of the muffler employed in this model is such in that an outlet pipe open to the atmosphere from the second expansion chamber is added to the conventional three-chamber-return construction. It is such a construction that has two tail pipes; one that connects the secondary expansion chamber to the atmosphere and another one that connects the third expansion chamber to the atmosphere (Fig. 29).

If the conventional three-chamber-return construction is applied when the sound level has to be lowered to a certain level, the high frequency components lower more, which tends to lower the assessment score in the pulse feeling. In this model, however, with the above-mentioned construction employed, the sound pressure in the high frequency zone is maintained, allowing the addition of effects from the frequency characteristics to the effects from the combustion intervals of engine when evaluating pulse feeling.

Sound pressures measured at each tail pipe outlet of the second chamber and the third chamber are shown in Fig. 30.

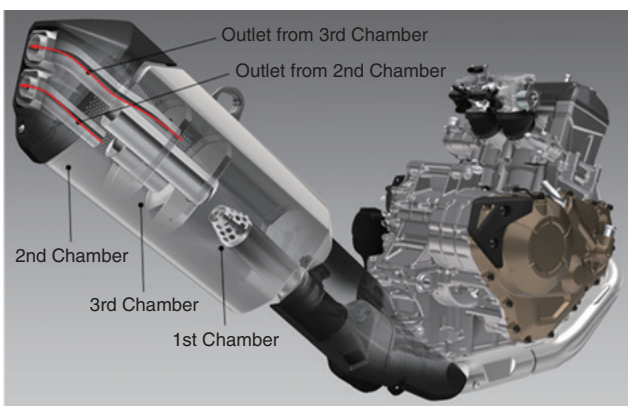

Fig. 29 Structure of muffler

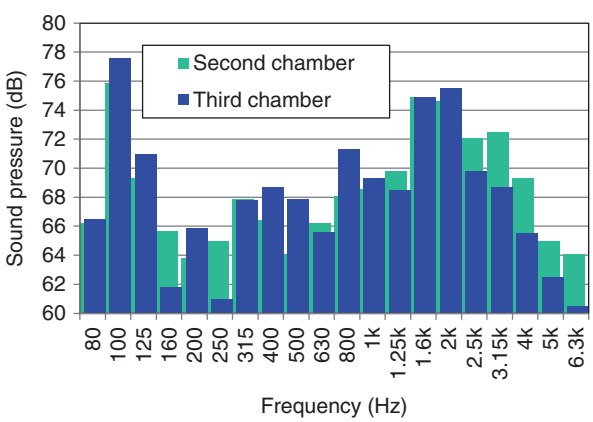

Fig. 30 Measurement results of exhaust sound pressure

It can be understood from the data that the sound pressure in the high frequency zone above 2.5 kHz is higher in the pipe from the secondary chamber construction than in the pipe from the third chamber. As the frequency characteristics of the tail pipe from the third chamber are considered as those of the conventional three-chamber-return construction, the enhanced pulse feeling can be considered as an effect of the tail pipe from the second chamber.

In the meantime, the sound pressure of the tail pipe from the third chamber is high in the low frequency zone around 100 Hz, which contributes to the deepness. The target exhaust sound quality was attained by tuning the diameter of each pipe while maintaining balance with the frequency characteristics and taking into account the total sound level and the power output characteristics.

The evaluation results of exhaust sound quality compared to the conventional models are shown in Fig. 31.

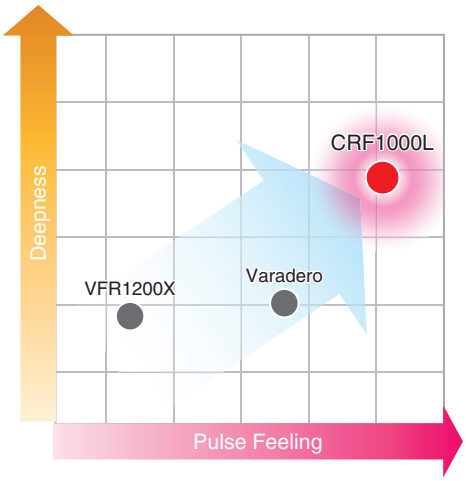

Fig. 31 Evaluation results of exhaust sound

7. Gauge Panel and Switches

7.1. Gauge Panel

Maintaining the image of a gauge panel for rally completion motorcycles, which is easy to read without changing the line of sight right and left, two negative LCD panels are placed vertically, and the display functions are clearly separated by the split line of the upper cover (Fig. 32). The meter select/set switch, which used to be located on the gauge panel, was relocated to the handlebar as mentioned earlier. Thus the stylish gauge panel design was realized. The split lines were also provided around the indicators, which were placed symmetrically beside the meter in a functional manner, thus producing an image of a cockpit.

The speedometer and the tachometer, which should be easiest to read when riding, were located in the upper center of the gauge panel where the rider requires the

least change of sight line. The multi information display was located below the upper LCD to shown abundance of information in the limited space in an easy-to-read manner (Fig. 33).

The indicators for DCT mode, gear position, G-switch selection, and torque control level, etc. were also gathered into the right and left indicator units to provide information in an easy-to-read manner.

7.2. Handlebar Switches

The torque control switch and the meter select/set switch were added as a left handlebar switch to allow operation with a minimal finger travel while holding the hand grip [Fig. 34(a)]. The shape and location of switches were elaborated through the operate-ability tests, actual test riding, etc. to best match finger movements and to obtain best "click" feeling and "fit" feeling. The frequently used turn signal switch was located on the lower side of the handlebar for easy operation. Regarding the shift switch for DCT, the shift up switch was located on the back side of the left handlebar switch to allow operation with the left forefinger [Fig. 34(b)], and the shift down was located in the front side for operation with the thumb. All those considerations made switch operations easier and surer than ever.

The engine stop/starter combination switch, the AT/MT selector for DCT, and the hazard switch were located on the right hand side of handlebar [Fig. 34(c)]. All switches on the right hand side were laid out to allow operation only with the thumb.

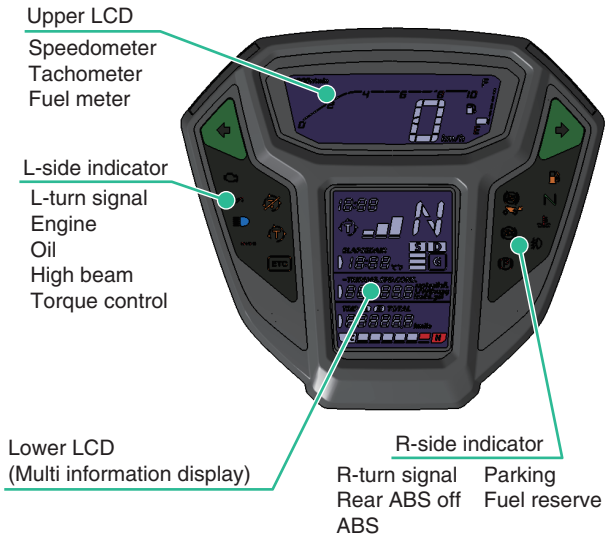

Fig. 32 Gage panel

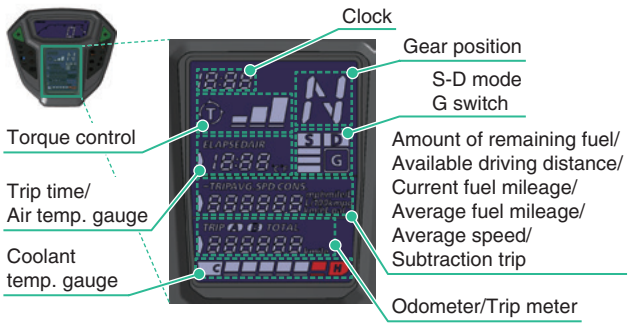

Fig. 33 Multi information display

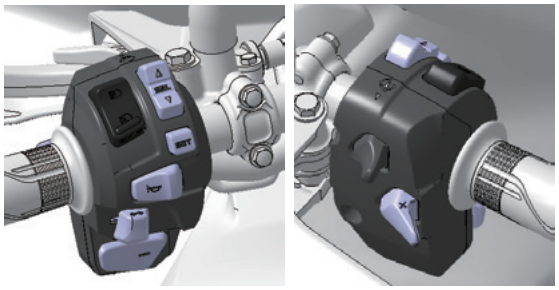

(a) Left handle switch (b) Sift up switch for DCT on the back side of the left handle

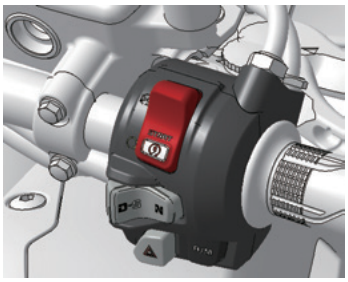

(c) Right handle switch

Fig. 34 Handle switch

8. Conclusion

The following were achieved through the development of CRF1000L that adopted technologies suitable for the next generation model while maintaining the heritage of the preceding models.

(1) Both off-road capabilities and comfort on street including high speed conditions.

(2) Honda's first DCT tuned for an off-road model is effective on gravel as well as on pavement.

As a result, many customers commended the motorcycle, saying "this is the Africa Twin."

We hope customers use CRF1000L regularly for a long time as a partner on long trips, as well as for various day to day activities.

Reference

(1) Kobayashi, H., Negoro, M., Osuga, T., Mitsubori, T., Oshima, T.: Development of NC700 series, Honda R&D

Technical Review, Vol. 24, No. 2, p. 23-31
(2) JP 5847688 (2015)
(3) Tanaka, K., Sugita, H., Saito, H., Sekita, M.: Design Method of Motorcycle Exhaust Sound Fitting to Vehicle Concept Regardless of Engine Configurations, SAE Technical Paper 2014-32-0121, doi: 10.4271/2014-32-0121, (2014).

■ Author ■

Naoshi IIZUKA

Yutaka YAMAKURA

Yoshiyuki IMAI

Akihiro IIDA

Takeshi SUGANO

Masanori NAKAMURA

Shinya KOYAMA

Kenichiro NAKAMURA

Kazuhiko ONO